TTV LUGGED VALVE

50L3040E0

Lugged Butterfly Valve · DN450-1600

Ref. L45016005030 40E0

Carbon Steel ASTM body, Stainless Steel disc and EPDM seat. Supplied with a bare shaft and top flange for a gearbox or actuator.

- Face to face EN 558 Series 20
- Pressure tested to EN 12266-1, ISO 5208
- Tightness ISO 5208, zero leakage API 598
- ISO 5752 Connection F14 / F16 / F25 / F30
- Mounts between PN10/16 flanges

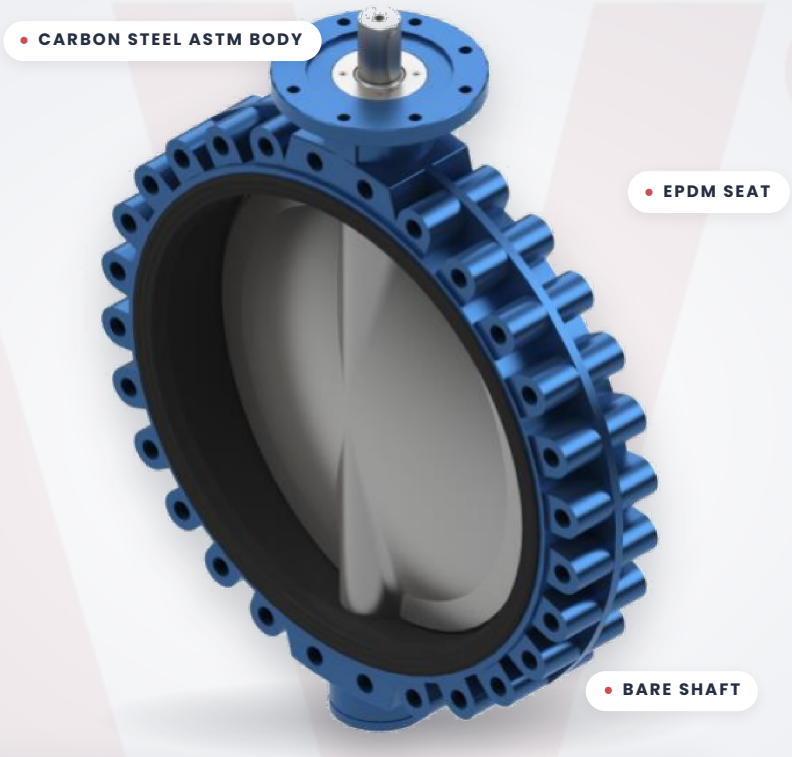

450-1600 mm	PN10-16 · ANSI 150	-20...+110 °C	EPDM
NOMINAL SIZE (DN)	PRESSURE RATING	TEMPERATURE RANGE	SEAT MATERIAL

Construction.

MATERIALS OF CONSTRUCTION

BODY	SHAFT	DISC	SEAT
Carbon Steel ASTM	**Stainless Steel**	**Stainless Steel**	**EPDM**
A216 Grade WCB	ASTM A182 F304	ASTM A351 CF 8M	

MOUNTING BETWEEN FLANGES
PN10/16 · ISO 7005, DIN 2501, EN 1092-1 · ANSI class 150: ANSI B16.5

FACE TO FACE
EN 558 Series 20 · ISO 5752 Series 20 · API 609 Table 1 · BS 5155 Series 4

PRESSURE TEST
EN 12266-1, ISO 5208: Body: 1.5×PN · Seat: 1.1×PN

TIGHTNESS TEST
ISO 5208, zero leakage API 598

TEMPERATURE
-20°C up to +110°C

TECHNICAL DATA

Dimensions & standards.

Lug DN450-1600 | PN10-16 & ANSI 150
Valve with bare shaft

Model shown on source sheet: 50L3040 EPDM. Source: TTV datasheet ref. L45016005030040E0, revision 0 (2-9-2019).

DIMENSIONAL DRAWING

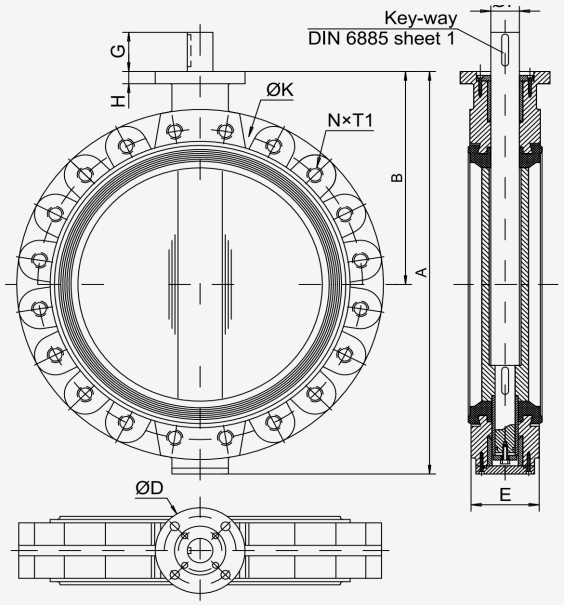

STANDARDS & RATINGS

Temperature
-20°C up to +110°C

Tolerances
ISO 2768-M

Face to Face
EN 558 Series 20
ISO 5752 Series 20
API 609 Table 1
BS 5155 Series 4

Pressure test according to
EN 12266-1, ISO 5208:
Body: 1.5×PN
Seat: 1.1×PN

Mounting between flanges
PN10/16
ISO 7005, DIN 2501, EN 1092-1
ANSI class 150: ANSI B16.5

Tightness test
ISO 5208, zero leakage API 598

Dimensions.

50L3040E0 · DN450-1600

DN		A	B	D	E	F	G	H	PN10		PN16		ANSI150		ISO 5752 Connection	Weight Kg
mm	inch								K	N°×T1	K	N°×T1	K	N°×T1		
450	18"	738	390	175	114	50	80	25	565	20xM24	585	20×M27	578	16x1 1/8"	F14	110
500	20"	825	440	175	127	50	80	25	620	20xM24	650	20×M30	635	20x1 1/8"	F14	135
600	24"	965	507	250	154	60	90	30	725	20xM27	770	20×M33	749,3	20x1 1/4"	F16	210
700	28"	1100	575	300	165	60	90	30	840	24xM27	840	24×M33	863	28x1 1/4"	F25	290
750	30"	1150	600	300	190	65	110	30	900	24xM30	900	24×M33	914	28x1 1/4"	F25	360
800	32"	1248	655	300	190	65	110	30	950	24xM30	950	24×M36	978	28x1 1/2"	F25	450
900	36"	1325	685	300	203	80	110	30	1050	28xM30	1050	28×M36	1086	32x1 1/2"	F25	550
1000	40"	1454	754	300	216	80	110	30	1160	28xM33	1170	28×M39	1200	36x1 1/2"	F25	760
1100	44"	1580	815	300	216	80	110	30	1270	32xM33	1270	32×M39	1314	40x1 1/2"	F25	1020
1200	48"	1720	873	300	254	100	110	35	1380	32xM36	1390	32×M45	1422	44x1 1/2"	F25	1460
1300	52"	1910	1005	350	360	120	130	35	-	-	-	-	1537	44x1 3/4"	F30	2330
1400	56"	1990	1025	350	360	120	130	35	1590	36xM39	1590	36×M45	1651	48x1 3/4"	F30	2450
1600	64"	2320	1190	415	360	150	160	40	1820	40xM45	1820	40×M52	1880	52x1 7/8"	F35	2940

(Note) dimensions and standards may vary without announcement. Colours are orientative.

Data supplied by TTV and provided for reference only. Specifications may change without notice – please confirm details with Actuation Valve & Control before ordering.

Need this valve automated?
Talk to our UK team about gearboxes, actuators and complete actuated valve packages.
actuation.co.uk